A Hybrid System for Power Refrigerate & Air Conditioning System By Renewable Source of Energy

Venkatesh Kumar Sharma, Raj Kumar, Rahul Kumar, Vidhan Kumar & Jyoti Ranjan

Dr. MGR University

E-mail : venkateshbanti@gmail.com, rajkrdns@gmail.com, rahulkcjs@gmail.com, eeetransmission@hotmail.com, jyoti7758@gmail.com

***Abstract* - A state of the art review is presented of different technologies that are available to deliver refrigeration from solar energy. The review covers solar electric, wind mill and some new emerging technologies. In this paper, a technique is used to run the refrigerator as well as air conditioner through the use of heat generated from refrigerator simultaneously. Thus the entire process is highly efficient as it minimize losses of the whole system. The use of relay in this technique of multi energy source refrigerator is that when the required power is not provided from solar, it will trip the circuit to wind energy and if both are inadequate the power will be supplied from electricity. In this system, refrigerator will operate with two panel and the panel movement is controlled by using PLC controller through the stepper motor and rotate the panel in the direction of maximum intensity of sun .In this paper a relay driver circuit (Logic switching) is used to trip the source which are generating maximum power at normal conditions. A Z- source inverter is connected to charge controller which converts DC into flexible and flexible AC to run the refrigerator. A variety of combined or hybrid system have also been investigated. Solar refrigeration can also inexpensive it would give the electric grid much relief mostly in summer days.**

Keywords - Refrigerator, solar panel, wind mill, heat exchanger, battery, charge controller, Z – source inverter, air conditioner.

I. INTRODUCTION

A refrigerator (colloquially fridge) is a common household appliance that consists of a thermally insulated compartment and a heat pump (mechanical, electronic or chemical) that transfers heat from inside of fridge to its external environment. So that, inside of fridge is cooled to temperature below the ambient temperature of room. Lowest temperature means lower the reproduction rate of bacteria. So refrigerator reduces the rate of spoilage. A refrigerator maintains a temperature a few degree above the freezing point of water, called a freezer.

There are two things that need to be known for refrigeration 1. A gas cools on expansion. 2. Second law of thermodynamics

As we know a solar powered refrigerator is a refrigerator which runs on electricity provided by solar energy. The use of solar energy to power refrigerator strives to minimize the negative impacts on refrigerator to the environment. Solar refrigeration is inexpensive and it would give the electric grid much relief. Electricity demand is at peak on hot summer days, 120 Giga watts more in summer than winter. In this paper the key is the energy exchanged when liquid turns to vapour and vice- versa, the process that cools you when you sweat. By far the most common approach, the one used by the refrigeration in your house, uses an electric motor to compress a refrigerant, say Freon turn it into liquid. When the pressure created by compressor is released, the liquid evaporates absorbing heat and lowering the temperature. Absorption chiller like, solar refrigerators use a heat source rather than a compressor to change the refrigerant from vapour into liquid. The two most common combinations are water mixed with either lithium bromide or ammonia. In each case the refrigerating gas is absorbed until heat is applied, which raise the temperature and pressure. At high pressure, the refrigerant condenses into liquid. Turning off the heat lowers the pressure, causing the liquid to evaporate back into a gas, thereby creating the cooling effect. The solar refrigerator comprises of all traditional components like the compressor, condenser, expansion- valve and the evaporator or the freezer. The solar system of the solar refrigerator comprises of the solar panel which collects the solar energy. The solar panels are fitted with photovoltaic cells that convert the solar energy into

electrical energy and store it in the battery. During the normal running of the solar refrigerator, the power is supplied directly by the solar panel, but when the output power of solar panel is less, the additional power is supplied by the battery. The battery is recharged when excess amount of power is produced by the solar panels.

The output supply of the battery and the solar panel is DC with voltage of about 12V. A typical solar system produces 300 mw or 600mw of power depending upon the size of the desired refrigerator. The voltage regulator is connected to the battery to convert the low voltage dc supply to high voltage ac supply to run the compressor. It is advantage to use ac supply compressor since it can run on domestic electrical supply also. Some of the solar refrigerator use compressor that run directly on dc supply.

II. System Description

Fig. 1

A. Charge controller -: The charge controller regulates the flow of electricity to protect the batteries from overcharging and over discharging. In this system, a MPPT charge controller is used which is needed to extract maximum power point to draw maximum available power. It reduces complexity of system.

B. Z-source inverter-: It can reduce the Z-source capacitor voltage stress greatly and has an inherent limitation to inrush current. It reduces harmonics and increases the efficiency of the system.

C. Heat exchanger:-

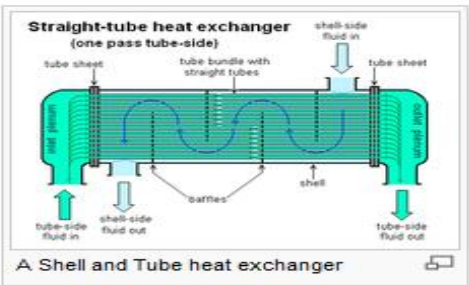

Fig. 2

A heat exchanger is a piece of equipment built for efficient heat transfer from one medium to another. The medium may be separated by a solid wall, so that they never mix, or they may be in indirect contact. In this system shell and tube heat exchangers are used which consist of a series of tubes one of tube contain the fluid that must be for either heating or cooling. The second fluid runs over the tube that is being either heated or cooled.

D. Dehumidifier-: A dehumidifier is a machine that takes moisture out of the air by condensing it onto a cold surface. It reduces the level of humidity in the air. Air conditioner inherently act as dehumidifier when they chill the air

E. Relay circuit-: A circuit that uses a small mechanical switch or a semiconductor device to energize a relay which will then close a contact to complete another circuit. In this system REED relay is used which is enclosed in a solenoid. The switch has a set of contacts inside an evacuated inert gas filled tube which protects the contacts against atmospheric corrosion. It is much faster than laser relays.

F. LDR sensor:-

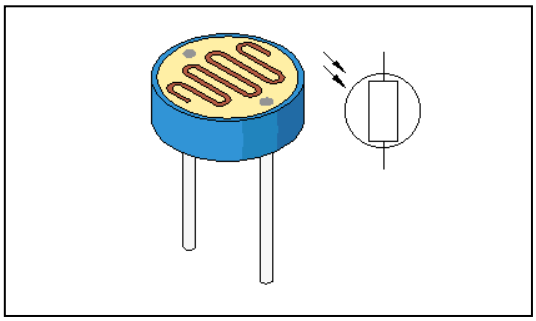

Fig. 3: Light sensing diode

A light dependent resistor is a device whose resistance varies according to the amount of light falling on its surface.

III. Working Principle

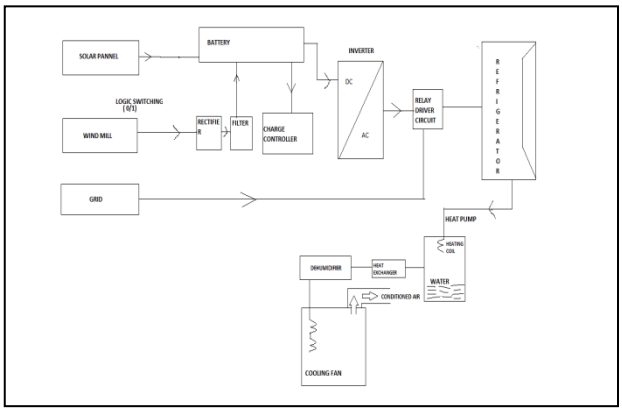

A. *Construction:-*

In this system, two renewable sources of energy, solar panel and wind mill are used which cut down the usage of electricity. Both are connected with the relay circuit and operate on the basis of power production. The power produced by the source is used to power the compressor of refrigerator through inverter. The heat pump of refrigerator is connected to the heating coil water basin. The heat exchanger and dehumidifier is connected to water basin which cool down the droplet of water and sent to condensed rod helps to produced conditioned air

B. *Working:-*

Solar panel converts sunlight directly into electricity to power the compressor of refrigerator because sunlight is not available at night time or during poor weather conditions, so a rechargeable battery is used to store electric energy. A properly designed and maintained battery subsystem will allow the refrigerator to operate a week or more without sunlight. The use of relay in the this technique of multi energy source refrigerator is that when the required power is not provided from solar , it will trip the circuit to wind energy and if both are inadequate , the power will supply from electricity mains. The heat pump which is connected to refrigerator at its top is used to transfer heat from inside of fridge to its external environment. The heat pump which is connected to heating coil is put down in the water basin. So heat inside the water evaporates. During this case, vapour gets collected and passes through the pipe through heat exchanger which is transferred to dehumidifier. The air gets condensed on a cold surface. Thus it reduces the level of humidity in the air. The cold moisture running through the cooling chamber, makes the surrounding cooler with the help of cooling fan. Thus, this technique is used to run the refrigerator as well as air conditioner with simple technique. So the entire process is highly efficient because energy is needed only to run the refrigerator and the air conditioner runs by the heat produced by (heat loss of) the refrigerator.

IV. Algorithm

1. Start the process.
2. Solar panel and wind mill consecutively charge the battery.
3. Relay driver circuit checks for the battery suppling voltage range (whether in the range of lower limit upper limit or not.
4. If battery has sufficient range voltage, relay driver circuit short circuits the battery source and open circuits the grid supply.
5. If battery has not sufficient range voltage, relay driver circuit, short circuits the grid source and open circuits the battery source meanwhile the battery gets charged.
6. If battery attains the range voltage, go to STEP 4.
7. Power is given to refrigerator.
8. Refrigerator heat is used for air-conditioning.
9. Stop the process.

V. Flow Chart

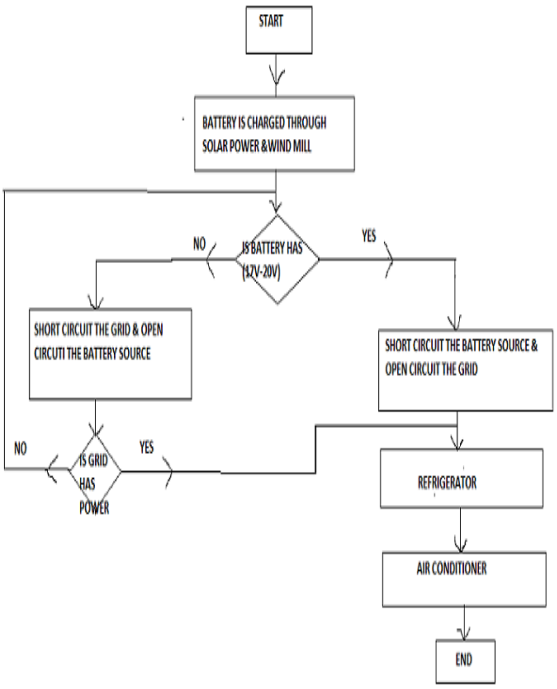

VI. Mathematical Model

A. *EFFICIENCY CALCULATION*

- The efficiency of solar panel is defined by the ratio of power (W) kW to the product of solar panel surface area A_s (M^2) and the direct radiation of solar beam I_p (kW/M^2). I_p=1kW/M^2 is commonly used for calculation of nominal efficiency.

$$\acute{\eta}_{sol\text{-}pow} = W/I_p * A_s = W/Q_s$$

Where Q_s=cooling surface

- The work W is consumed by mechanical compressor to produce the cooling power Q_c. Refrigeration machine efficiency is defined as the cooling power Q_e divided by work input W

$$\acute{\eta}_{pow\text{-}cool} = Q_e/W$$

- The total efficiency of the system is

$$\acute{\eta}_{sol\text{-}cool}=Q_e/Q_s$$

VII. Rating

Battery voltage=12v

Mini refrigerator required power=200 Watts

For 5 hrs power required=200*5=1000Watts

1000 Watts=1KWhr

Power required in 1 day=(24hr/5)=5*1KWhr=5KWhr

Let 1 unit cost=Rs 5.00.

One day cost =Rs 25.00.

1 month cost=Rs 750.00.

Therefore, for only refrigerator alone so much power and money is spent i.e. Rs 750 & 150 KWhr. But with the above system, no running cost will be there except the initial cost. It is totally economically free and one of the gift of nature. Also it saves the power required to run the air conditioner. Imagine if both the systems running on grid. Minimum required power is 450 KWhr and minimum required cost is Rs 2250.00.

VII. PLC Experimental Results

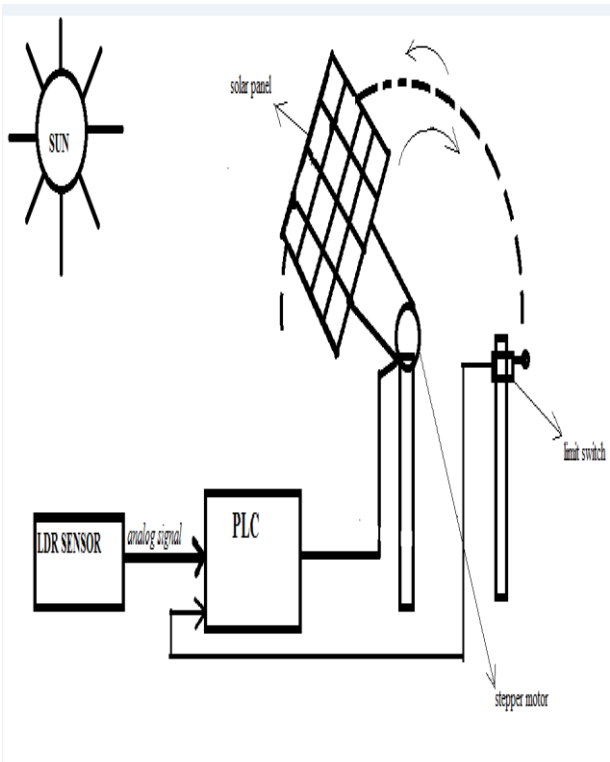

Fig. 4 : Panel arrangement

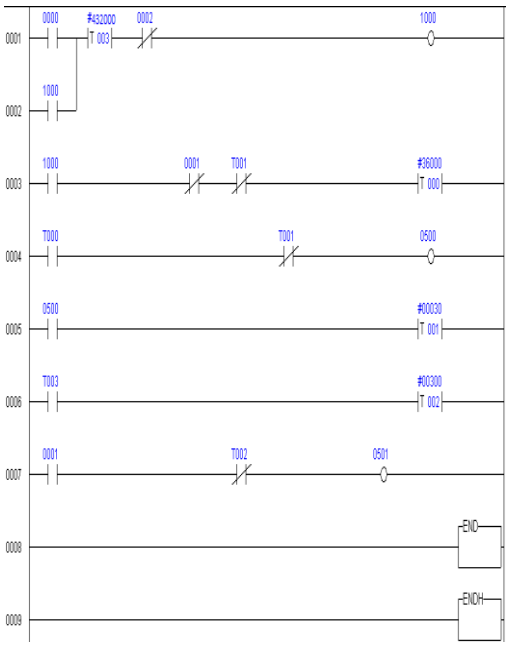

Fig. 5 : Ladder diagram

VIII. Conclusion

The paper concludes that a variety of options are available to convert solar energy and wind energy into refrigeration effects. Therefore we have concluded our system in which refrigerator and air conditioner is powered by renewable sources which is more efficient for future and also is non-polluting.

IX. Acknowledgement

We would like to thank our respected co-ordinator Ms. S.Bhuneswari for inspiring and guiding for this project. We would also like to thank Mr.L.Ramesh ,HOD, EEE for giving permission to implement the technique in our university. We would also like to thank Dr. V.Ganesan and Vijayanand, co-ordinator for their valuable help and regard.

References

[1] D.S kim and C.A infant Ferreira "Solar refrigeration options –a state of –of-the art review"

[2] Alexis,G.k.,"A solar ejector cooling system using refrigerant."

[3] Wang, R.Z., Oliveira, R.G., 2005. Adsorption refrigeration – an efficient way to make good use of waste heat and solar energy.
In: Proceedings of International Sorption Heat Pump Conference, Denver, USA.

[4] Wang, R.Z., Jia, J.P., Zhu, Y.H., Teng, Y., Wu, J.Y., Cheng, J., 1997.

◈◈◈