PAPR Reduction of OFDM Using a New Phase Sequence in SLM Technique

Komal Gupta, Monika Kushwaha, Abhay Pratap Sharma & Arvind Singh Panwar

Moradabad Institute of Technology, Moradabad 244001, U.P. India
E-mail: mit.ec.komal@gmail.com, mit.ec.monika@gmail.com

***Abstract* – Orthogonal Frequency Division Multiplexing (OFDM) is an efficient method of data transmission. It is a base for high speed communication systems. The main drawback of OFDM system is that it suffers from high Peak – to – Average Power Ratio (PAPR). Due to high PAPR there is inefficient use of high power amplifier and this could limit transmission efficiency. OFDM consist of large number of independent subcarriers, as a result of which the amplitude of such a signal can have high peak values. In this paper, we introduce a modified SLM technique to reduce PAPR. The simulation results show PAPR can be reduced by applying the proposed scheme. The complexity is also reduced in proposed scheme. The PAPR of original OFDM is near about 10.4dB. By using SLM technique with original OFDM PAPR is reduced nearly about 3.5dB. And by using the modified SLM technique PAPR is reduced nearly about 3.8dB in comparison to original OFDM.**

***Keywords* – OFDM, SLM, PAPR, BER, QPSK**

I. INTRODUCTION

By the turn of the nineteenth century, a great leap in communication system was observed when wireless communication was introduced. After the advent of wireless communication huge change has been observed in the lifestyle of people. Wireless communication which was initially implemented analog domain for transfer has is now-a-days mostly done in digital domain. Instead of a single carrier in the system multiple sub-carriers are implemented to make the process easier.

The performance of wireless communication systems is mainly governed by the wireless channel environment. As opposed to the typically static and predictable characteristics of a wired channel, the wireless channel is rather dynamic and unpredictable, which makes an exact analysis of the wireless communication system often difficult. In recent years, optimization of the wireless communication system has become critical with the rapid growth of mobile communication services and emerging broadband mobile Internet access services. In fact, the understanding of wireless channels will lay the foundation for the development of high performance and bandwidth-efficient wireless transmission technology.

OFDM has several advantages like high spectral efficiency, robustness to channel fading, immunity to impulse interference, uniform average spectral density, capacity to handle very strong echoes and less non-linear distortion. OFDM is the modulation technique used in many new broadband communication systems [5]. In recent years OFDM has emerged as the standard of choice in a number of important high data applications. OFDM is the modulation technique used in many new broadband communication systems. In recent years OFDM has emerged as the standard of choice in a number of important high data applications.

Though OFDM has many advantages there are disadvantages also. One of the major disadvantages of OFDM is the high Peak – to – Average power ratio of OFDM signal. These multi – carrier systems have a problem that Peak – to – Average power ratio increases with the increase of number of subcarrier, which causes poor efficiency or serious performance degradation to transmit power amplifier.

Many PAPR reduction techniques have been proposed. These techniques can be mainly categorized into signal scrambling techniques and signal distortion techniques.

II. ORTHOGONAL FREQUENCY DIVISION MULTIPLEXING

With the ever growing demand of this generation, need for high speed communication has become an utmost priority. Various multicarrier modulation techniques have evolved in order to meet these demands, few notable among them being Code Division Multiple Access (CDMA) and Orthogonal Frequency Division Multiplexing (OFDM). Orthogonal Frequency Division Multiplexing is a frequency – division multiplexing (FDM) scheme utilized as a digital multi – carrier modulation method. A large number of closely spaced orthogonal sub – carriers is used to carry data. The data is divided into several parallel streams of channels, one for each sub – carriers. Each sub – carrier is modulated with a conventional modulation scheme (such as QPSK) at a low symbol rate, maintaining total data rates similar to the conventional single carrier modulation schemes in the same bandwidth.

The OFDM has many advantage such as high bandwidth efficiency, robustness to the selective fading problem, use of small guard interval, and its ability to combat the ISI problem. The main disadvantages of the OFDM systems is that it exhibits a high peak to average power ratio, namely the peak value of some of the transmitted signals could be much larger than the typical values. PAPR (Peak Average Power Ratio) makes the amplifiers to work in non-linear regions. This will cause inter modulation between the different sub carriers and introduce additional interference to the system. Additional interference leads to an increase in Bit Error Rate (BER).Large PAPR leads to in band distortion and spectral spreading.

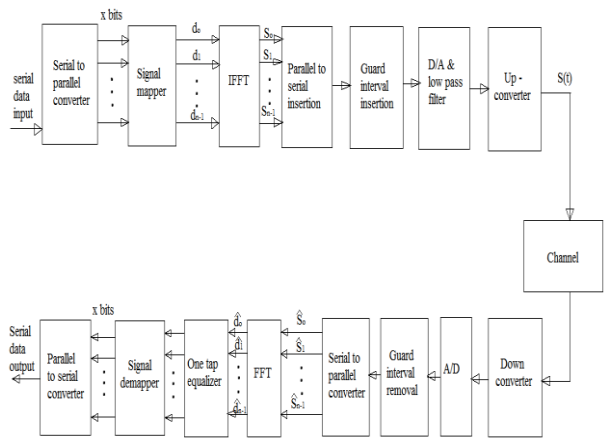

Figure 1.FFT Based OFDM Model

Orthogonal Frequency Division Multiplexing is a special form of multicarrier modulation which is particularly suited for transmission over a dispersive channel. Here the different carriers are orthogonal to each other, that is, they are totally independent of one another.

Two periodic signals are orthogonal when the integral of their product over one period is equal to zero.

For the case of continuous time:

$$\int_0^T \cos(2\pi n f t)\cos(2\pi m f t)\,dt = 0$$

For the case of discrete time:

$$\sum_{k=0}^{N-1} \cos\left(\frac{2\pi k n}{N}\right)\cos\left(\frac{2\pi k m}{N}\right)dt = 0$$

Where $m \neq n$ in both cases.

III. PROBLEM OF PEAK TO AVERAGE POWER RATIO IN OFDM

An OFDM signal consists of a number of independently modulated sub carriers, which can give a large peak-to-average power (PAP) ratio when added up coherently. When N signals are added with the same phase, they produce a peak power that is N times the average power. High PAPR of the transmitted signals results in clipping noise, non–linear distortions of power amplifiers, BER performance degradation, energy spilling into adjacent channels, inter modulation effects on the sub carriers, warping of the signal constellation in each sub channel, increased complexity in the analog to digital and digital to analog converter.

Let the data block of length N be represented by a vector X=[X0, X1, X2… XN-1]^T. Duration of any symbol X_k in the set 'X' is 'T' and represents one of the subcarriers $\{f_n, n=0,1,\ldots,N-1\}$ set. As the N sub–carriers chosen to transmit the signal are orthogonal to each other, so we can have $f_n = n\Delta f$, where $n\Delta f = 1/NT$ and NT is the duration of the OFDM data block 'X'. The PAPR of the transmitted signal is defined as

$$\text{PAPR}=\frac{\max_{0\le t<NT}|x(t)|^2}{1/NT\int_0^{NT}|x(t)|^2 dt}$$

PAPR is defined as a ratio of peak instantaneous power to the average power. Reducing the max |x(t)| is the principle goal of PAPR technique.

IV. PAPR REDUCTION TECHNIQUES

There are several techniques to reduce PAPR of the OFDM system [1]-[2]. These techniques are classified into two i.e. Signal Scrambling Techniques and Signal Distortion Techniques [3]. In signal scrambling techniques we basically scramble the codes to reduce PAPR. Coding techniques can be used for signal scrambling.

Signal scrambling technique can be further classified into:-

1. With explicit side information.

2. Without explicit side information.

Signal scrambling technique with explicit side information is of two types i.e. coding based and probabilistic schemes. Selective level mapping comes under probabilistic schemes. Hence selective mapping can be said to be a part of signal scrambling technique with explicit side information.

V. THE SELECTIVE MAPPING TECHNIQUE

The SLM technique was first described by Bauml et al. [4]. Selective mapping scheme is a technique in which multiple phase rotations are applied to the constellation points, and the one that minimizes the time signal peak is used. Selective mapping involves generating a large set of data vectors all representing the same information. The data vector with the lowest resulting PAPR is selected. Information about the selected and transmitted data vectors is coded and these codes are by an additional sub carriers.

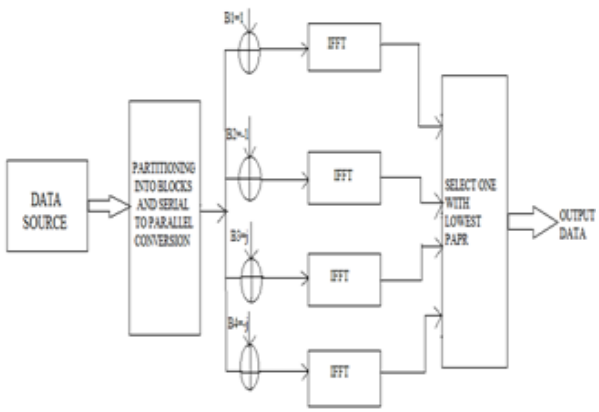

Figure 2.Block Diagram of SLM Technique

In this technique the actual transmit signal lowest PAPR is selected from a set of sufficiently different signals which all represents the same information. SLM Technique is very flexible as they do not impose any restriction on modulation applied in the subcarriers or on their number.

VI. PROPOSED SCHEME

In proposed scheme we have modified the SLM technique. Earlier in SLM technique we have used phase sequences [B(1),B(2),B(3),B(4)] = [1,-1,j,-j].

In the proposed scheme we have used phase sequences [B(1),B(2),B(3)…..B(u)] = [1,-1,-1,-1,-1,2,-1,-1,3,-1,3,-1,-1,-1,-1,4]. First the data source is partitioned into blocks and then serial to parallel conversion of data is done. The transformed data is processed by the modified SLM unit. Then IFFT of data is done. After that one with lowest PAPR is selected.

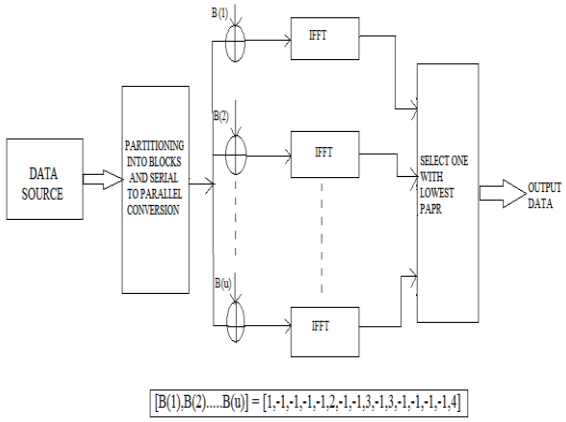

Figure 3. Block Diagram of Modified SLM Technique

VI. SIMULATION RESULT

We carried out extensive simulation using MATLAB to evaluate the PAPR reduction performance of the modified SLM technique. OFDM systems with N=256 subcarriers was used for the simulation with QPSK modulation. The parameters used for simulation are given in table below:

Modulation	QPSK
Number of data subcarriers(N)	256
Total number of data symbols	1000
Size of the phase sequence	256

We implemented the proposed algorithm of modified SLM to obtain a design in MATLAB. The result is shown in figure 5. We compared the result with

earlier SLM technique and it is found that proposed method worked efficiently.

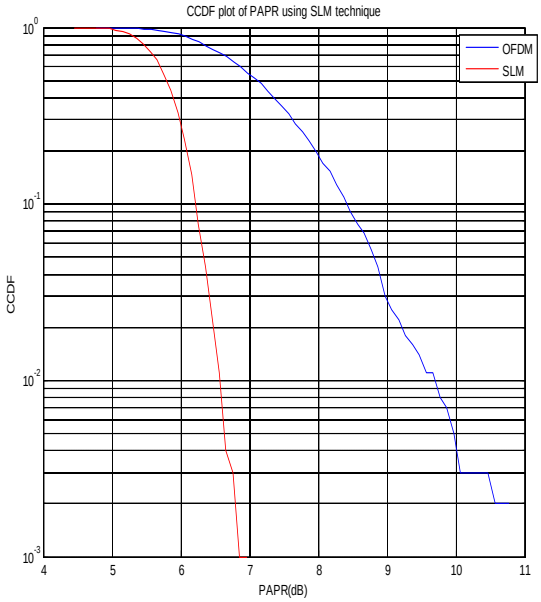

Figure 4.CCDF Plot of PAPR using SLM Technique

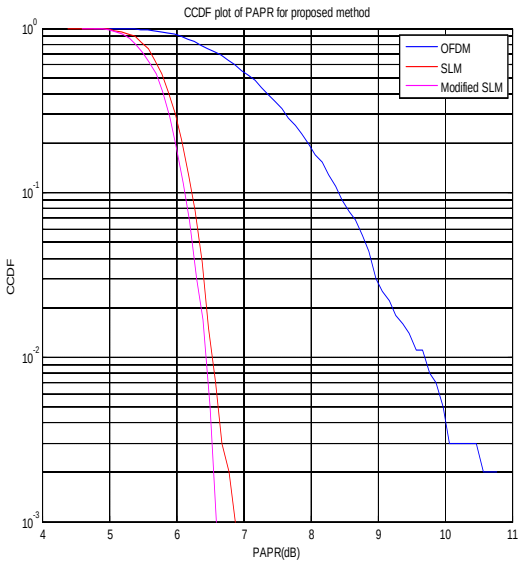

Figure 5.CCDF Plot of PAPR for PROPOSED Method

The PAPR obtained by using SLM technique with phase sequence [1, -1, j, -j] is nearly about 6.9dB. The PAPR obtained by using modified SLM technique is nearly 6.6dB. So we are able to reduce PAPR effectively by nearly 0.3dB by modified SLM technique.

VII. CONCLUSION

In this paper, technique for reducing PAPR has been proposed. By modifying the sequence used in original PAPR, new technique improved the PAPR value near about 6.6dB. The PAPR reduction performances were evaluated using MATLAB simulation tool. Experimental result clearly proves that there is a significant reduction in PAPR. The proposed scheme reduced the PAPR by about 3.8dB.

VIII. REFERENCES

[1] X. Li, L.J. Cimini, “Effects of clipping and filtering on the performanceof OFDM,” IEEE Com. Letters, Vol. 2, No. 5, pp. 131-133, May1998.

[2] R. W. Bami, R. F. H. Fischer, and J. B. Hber, “Reducing the peak-to-average power ratio of Multicarrier modulation by selected mapping,”IEE Electron, Lett, vol. 32, pp. 2056–2057, Oct. 1996.

[3] Rakesh Rajbanshi, "Peak to Average Power Ratio Reduction Techniques Survey and Analysis", EECS 800, Dec. 2004.

[4] M.Park, J.Heeyong, J.Cho, N.Cho, D.Hong and C.Kang, “PAPRreduction in OFDM Transmission using hadamard transform,” IEEEInternational Conference on Communication, vol.1, June 2000, PP.430-433.

[5] L.J.Cimini, Jr.,”Analysis and Simulation of a Digital Mobile Channel Using Orthogonal Frequency Division Multiplexing,” IEEE Trans.Communication, vol.33, pp.665-675, July 1985.

[6] A.Zolghadrashi and M.H. Ghamat, “An overview of PAPR Reduction technique for Multicarrier Transmission and propose of New Techniques for PAPR reduction,” Iranian Journal of Electrical and computer Engineering, Vol.7, No.2, Summer-Fall 2008, pp.115-120.

[7] K.Kasiri and M.J. Dehghani,”A Blind SLM Scheme for Reduction of PAPR in OFDM Systems” Worl Academy of Science, Engineering and Technology 50 2009.

[8] L.J. Cimini, Jr., and N.R. Sollenberger, “Peak-to-average power ratio reduction of an OFDM Signal using partial transmit sequences,” IEEE Communication Letters, Vol. 4, No. 3, pp. 86-88, Mar. 2000.

[9] R. W. Bami, R. F. H. Fischer, and J. B. Hber, “Reducing the peak-toaverage power ratio of Multicarrier modulation by selected mapping,”IEE Electron, Lett, vol. 32, pp. 2056–2057, Oct. 1996.

[10] Rakesh Rajbanshi, "Peak to Average Power Ratio Reductionn Techniques Survey and Analysis", EECS 800, Dec. 2004.

[11] N.vishnukanth, I.V.K.Chakka, and A.Jain “SLM based PAPR reduction of an OFDM signal using new phase sequence “, IEEE Electronics, Letters, submitted on July 2009.

[12] P.Foomooljareon and W.A.C. Fernando “PAPR Reduction in OFDM Systems” ThammasaItn t. J. Sc.T ech.,Vol.7, No.3, September-December 2002

[13] N.V. Irukulapati, V.K. Chakka and A. Jain “SLM based PAPR reduction of OFDM signal using new phase sequence” ELECTRONICS LETTERS 19th November 2009 Vol. 45 No. 24

[14] Chin-Liang Wang, Senior Member, IEEE, and Yuan Ouyang , Student Member, IEEE “ Low-Complexity Selected Mapping Schemes for Peak-to-Average Power Ratio Reduction in OFDM Systems ” IEEE TRANSACTIONS ON SIGNAL PROCESSING, VOL. 53, NO. 12, DECEMBER 2005

[15] Hyunseuk Yoo, Associate Member, IEEE Frederic Guilloud, Member, IEEE, and Ramesh Pyndiah, Senior Member, IEEE “Low Complexity Partial Selected Mapping for PAPR Reduction of OFDM System” published in "IEEE SCVT 2010: 7th Annual Symposium on Communications and Vehicular Technology, Enschede : Netherlands (2010)"

[16] Zhongpeng Wang “ Reduction PAPR of OFDM Signals by Combining SLM with DCT Transform” Int. J. Communications, Network and System Sciences, 2010, 3, 888-892

[17] A. Zolghadrasli and M. H. Ghamat, “An Overview of PAPR Reduction Techniques for Multicarrier Transmission and Propose of New Techniques for PAPR Reduction,” Iranian Journal of Electrical and Computer Engineering, Vol. 7, No. 2, Summer-Fall 2008, pp. 115-120.

[18] Ashraf A. Eltholth, Adel R.Mikhail, A.Elshirbini, Moawad I. Moawad, and A.I.Abdelfattah, “Peak –to-Average Power Ratio Reduction in OFDM Systems using Huffman coding World Academy of Science, Engineering and Technology 43 2008.

[19] Kojima, T.; Iwamoto, S.; Shida, Y.; Fujino, T.;, “A novel SLM PAPR reduction of OFDM Signals without side information, “ Signal Processing and Information Technology (ISSPIT) IEEE International Symposium on, Vol., no., pp.321-325, 15-18 Dec 2010.

[20] Yuan Jiang “New Companding Transform for PAPR Reduction in OFDM” IEEE COMMUNICATIONS LETTERS, VOL. 14, NO. 4, APRIL 2010

[21] Sulaiman A. Aburakhia, Ehab F. Badran, and Darwish A. E. Mohamed, Member, IEEE ” Linear Companding Transform for the Reduction of Peak-to-Average Power Ratio of OFDM Signals” IEEE TRANSACTIONS ON BROADCASTING, VOL. 55, NO. 1, MARCH 2009

◈◈◈