Voltage SAG Mitigation by Fuzzy Controlled DVR

Abinash Singh[1], Puneet Arora[2] & Balwinder Singh[3]

[1,2,3] PEC University of Technology, Chandigarh
E-mail : abinashingh1986@gmail.com, puneetishaan@yahoo.co.in , balwindersingh@pec.ac.in

Abstract - — The growth in the use of power electronics has* caused a greater awareness of power quality. Voltage sags, *swells, harmonics can cause equipment to fail, misoperate or shut down, as well as create huge current imbalances which could blow fuses or trip breakers. These effects can be very expensive for the customer, ranging from minor quality variations to production downtime and equipment damage . DVR is useful for compensating voltage quality problems that are due to voltage sag. With a DVR installed on a critical load feeder, the line voltage is restored to its nominal value within the response time of a few milliseconds thus avoiding any power disruption to the load. In this paper a MATLAB simulink model of fuzzy logic controlled DVR to mitigate the voltage sag in distribution network is presented.

Keywords—DVR (Dynamic Voltage Restorer) , VSC (Voltage Source Converter), , FLC(Fuzzy Logic Controller), SSC(Static series compensator), FIS (Fuzzy Inference system).

I. INTRODUCTION

Recently power quality has become one of the most studied topics in electrical engineering. Power quality is becoming important in performance of many industrial applications such as information technology, significant influence on high technology devices related to communication, advanced control, automation, precise manufacturing technique and on-line service. Thus, power quality is obtaining increasing attention by both industrial as well as commercial electrical users [2]. Power quality can be defined as having a bus voltage that closely resembles a sinusoidal waveform of required magnitude [3].

Power quality problems include transients, sags, interruptions and other distortions to the sinusoidal wave-form .

The power quality problem that is common in almost all distribution system is voltage sags/swells. The voltage sag is defined as a short duration reductions in the rms supply voltage that can last a few milliseconds to a few cycles, with reduction in voltage [6]. voltage sag can also be defined as a sudden short duration reduction in voltage magnitude between 0.1 and 0.9 p.u compared to nominal voltage. Voltage sags originate from faults on the transmission and distribution systems that are caused by various events, such as animal contact, storms, equipment failure, insulator failures [7].

Voltage sags are considered as a dominant disturbance affecting on power quality . Voltage sag is one of most important power quality issues because the increasing usage of voltage sensitivity devices has made industrial processes more susceptible to supply voltage [12]. Custom power devices are mainly used in voltage sag mitigation, protection and control of sensitive loads, reactive power and voltage regulation and harmonic elimination applications. There are different methods which have been proposed to mitigate the voltage sags like Uninterruptible Power Supplies (UPS), network reconfiguration devices like Static Transfer Switches (STS), DSTATCOM and series compensating devices like Dynamic Voltage Restorers (DVR) [13],[14]. Due to its excellent dynamic capabilities, DVR is well suited to protect critical or sensitive load from short duration voltage dips or swells. When a fault occurs in a distribution network, a sudden voltage dip will appear on adjacent load feeders. With a DVR installed on a critical load feeder, the line voltage is restored to its nominal value within the response time of a few milliseconds thus avoiding any power disruption to the load [1].

Dynamic voltage restorer can be controlled by controlling its inverter by using various linear and non-linear control methods, like feed forward control, feedback control, composite control, ANN control, Fuzzy control, no deadbeat control and space vector control. Fuzzy logic controllers (FLCs) have generated a good deal of interest in certain applications. The advantages of FLCs over conventional controllers are that they do not need an accurate mathematical model, they can work with imprecise inputs, can handle non-linearity, and they are more robust than conventional nonlinear controllers [8].

II. DYNAMIC VOLTAGE RESTORER

A. Basic Functioning of DVR

A DVR is a device that injects a dynamically controlled voltage in series to the bus voltage by means of a booster transformer as depicted in Fig.2 . The basic function of DVR is to detect any voltage sag occurred in the power distribution network and injects specific power to protect sensitive load. DVR is primarily for use at the distribution level [3]. The voltage source converter (VSC), connected in series with the grid as a static series compensator (SSC), also known (commercially) as the dynamic voltage restorer (DVR), is suited to protect sensitive loads against voltage dips. The SSC injects three voltages in the grid by means of three single-phase transformers, synchronized in such a way that the load voltage magnitude and phase are constant at any instant to guarantee continued operation for the load [4],[10].In voltage restoration process, the energy should be injected from DVR to distribution system. The required energy for injection during sag may be supplied from the grid or energy storage devices such as batteries or super conducting magnetic energy storage systems. The voltage sags resulting from faults can be corrected by adopting DVR (Dynamic Voltage Restorer) which uses a series-connected topology.

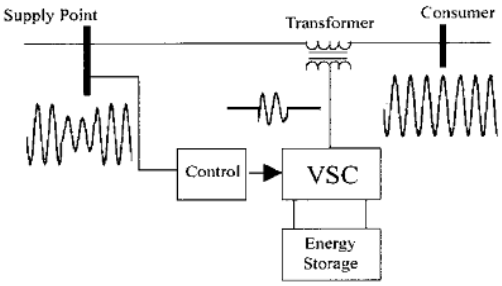

Fig.2 Dynamic voltage restorer operation.

Using a DVR is more reliable and quick solution to maintain a clean supply of electricity for customers .The DVR was first installed in 1996. It is normally installed in a distribution system between the supply and the critical load feeder [3]. The core element in DVR design is the three-phase voltage converter. This inverter utilizes solid-state power electronics (insulated gate bipolar transistors, IGBTs) to convert DC to AC and back again during operation. The DVR is connected in series with the distribution line through an injection transformer, actually three single-phase transformers. The primary side (connected into the line) must be sized to carry the full line current. The primary voltage rating is the maximum voltage the DVR can inject into the line for a given application. The DVR is a power-quality device that protects highly sensitive loads, mainly industrial loads, against the common disturbances of the power system.

B. Components of DVR

The DVR can be divided into four component blocks, namely:

i) Voltage source PWM inverter

PWM inverter using IGBT switches is used in the model. IGBT switches are commonly used in series connected circuits. The insulated gate bipolar transistor or IGBT is a three-terminal power semiconductor device, noted for high efficiency and fast switching. Pulse-width modulation (PWM) is a very efficient way of providing intermediate amounts of electrical power between fully on and fully off. The voltage source converter is used to convert the DC to AC and then supply the voltage to distribution feeder through an injection transformer.

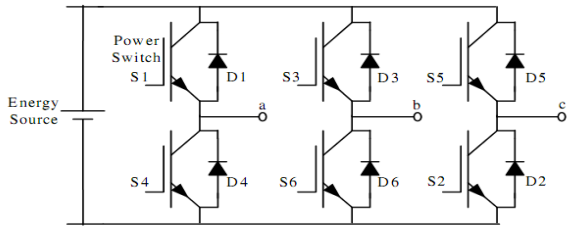

Fig.2.1 Basic three phase inverter

ii) Injection Transformers

The injection transformers connect the DVR to the distribution network via the high voltage windings . They transform and couple the injected compensating voltages generated by the VSI to the incoming supply voltage. Basically injection transformer used in the model presented in this paper are three single phase transformers. The high voltage side of the injection transformer is connected in series to the distribution line, while the low voltage side is connected to the DVR power circuit. For a three-phase DVR, three single-phase or three-phase voltage injection transformers can be connected to the distribution line, and for single phase DVR one single-phase transformer is connected

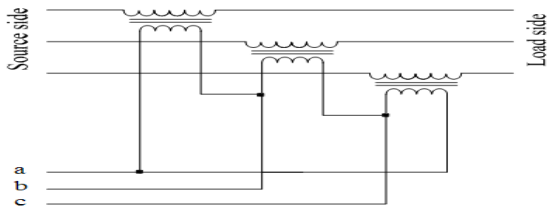

Fig.2.2 Connection method for the injection transformer

The transformers not only reduce the voltage requirement of the inverters, but also provide isolation between the inverters [9].

iii) Energy storage

The energy storage unit supplies the required power for compensation of load voltage during voltage sag. A dc battery is used for this purpose.

iv) Controller

A fuzzy logic controller which controls the inverter of DVR, has been proposed in place of the conventional PI controller

III. CONTROL METHOD OF DVR

DVR can be controlled by controlling its inverter. The control unit gives information on required voltage to be inserted and its duration during sag. Inverter is the core component of DVR. The control strategy of inverter will directly affect the performance of the DVR [5]. The Fuzzy Logic Controller (FLC) is used as controller in the proposed model. The Fuzzy Logic tool was introduced in 1965, also by Lotfi Zadeh, and is a mathematical tool for dealing with uncertainty. It offers to a soft computing partnership 'the important concept of computing with words'. It provides a technique to deal with imprecision and information granularity. The fuzzy theory provides a mechanism for representing linguistic constructs such as"many," "low," "medium," "often," "few." In general, the fuzzy logic provides an inference structure that enables appropriate human reasoning capabilities. In fuzzy logic, basic control is determined by a set of linguistic rules which are determined by the system. Since numerical variables are converted into linguistic variables, mathematical modelling of the system is not required. The fuzzy logic control is being proposed for controlling the inverter action. FLC is a new addition to control theory and it incorporates a simple, rule based IF X AND Y THEN Z approach to a solving control problem rather than attempting to model a system mathematically [11].

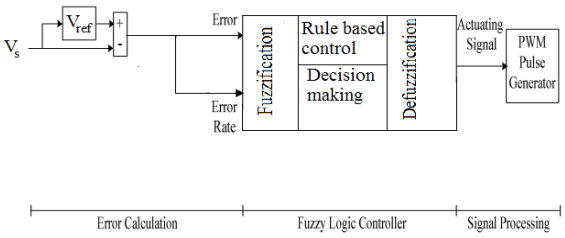

Fig.3 Block diagram of proposed control system

A. Error Calculation

The error is calculated from the difference between supply voltage data and the reference voltage data. The error rate is the rate of change of error. The error and error rate are defined as:

$$\text{Error} = \text{Vref} - \text{VS} \quad (1)$$

$$\text{Error rate} = \text{error}(n) - \text{error}(n-1) \quad (2)$$

B. Fuzzification

Fuzzification is an important concept in the fuzzy logic theory. Fuzzification is the process where the crisp quantities are converted to fuzzy. Thus fuzzification process may involve assigning membership values for the given crisp quantities.This unit transforms the non-fuzzy (numeric) input variable measurements into the fuzzy set (linguistic) variable that is a clearly defined boundary, without a crisp (answer). In this simulation study, the error and error rate are defined by linguistic variables such as negative big (NB), negative medium (NM), negative small (NM), zero (Z), positive small (PS), positive medium (PM) and positive big (PB) characterized by membership functions given in Fig. 3.1.

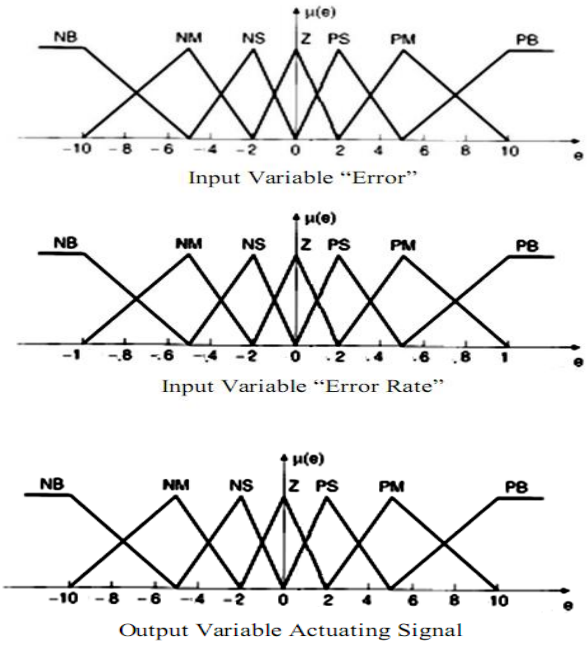

Fig 3.1 Membership Functions for inputs and output

C. Decision Making

Fuzzy process is realized by Mamdani method. Mamdani inference method has been used because it can easily obtain the relationship between its inputs and output [11]. The set of rules for fuzzy controller are represented in Table II. There are 49 rules for fuzzy controller. The output membership function for each rule is given by the Min (minimum) operator. The Max operator is used to get the combined fuzzy output from the set of outputs of Min operator .The output is

produced by the fuzzy sets and fuzzy logic operations by evaluating all the rules.

A simple if-then rule is defined as follows:

"If error is Z and error rate is Z then output is Z"

Table II Fuzzy rules

Ce\e	NB	NM	NS	Z	PS	PM	PB
NB	NB	NB	NB	NM	NM	NS	Z
NM	NB	NB	NM	NM	NS	Z	PS
NS	NB	NM	NM	NS	Z	PS	PM
Z	NM	NM	NS	Z	PS	PM	PM
PS	NM	NS	Z	PS	PM	PM	PB
PM	NS	Z	PS	PM	PM	PB	PB
PB	Z	PS	PM	PM	PB	PB	PB

D. Defuzzification

It is the process of converting the controller outputs in linguistic labels represented by fuzzy set to real control (analog) signals. Defuzzification means the fuzzy to crisp conversions. The fuzzy results generated cannot be used as such to the applications, hence it is necessary to convert the fuzzy quantities into crisp quantities for further processing. This can be achieved by using defuzzification process. Centroid method is used for defuzzification in the present studies.

E. Signal Processing

The outputs of FLC process are the control signals that are used in generation of switching signals of the PWM inverter by comparing with a carrier signal.

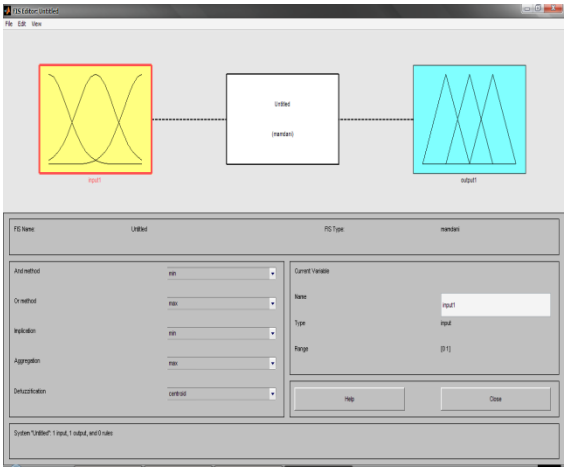

Fig.3.2 Constructing a FIS File in MATLAB

A process for constructing a FIS can be summarized as follows:

i. Choose a specific type of FIS (Mamdani or Sugeno)

ii. Select relevant input-output variables

iii. Determine the number of linguistic terms associated with each input-output variables (determine the membership function for each linguistic term)

iv. Design a collection of fuzzy if-then rules

v. Choose the defuzzification method .

Algorithm for fuzzy logic calculations

STEP 1 Defining the inputs :

a) error b) error rate

STEP 2 Fuzzy sets formation

NB-Negative big,

NM-Negative medium,

NS-Negative small,

Z-Zero,

PS-Positive small,

PM-Positive medium,

PB-Positive big.

STEP 3 Fuzzification: calculation of degree of membership of inputs for each fuzzy set

STEP 4 Formation of rules (using table I)

"If e is Z and c.e is Z then output is Z" and so on.

STEP 5 Calculation of D.O.F of each rule (or rule strength)

Rule strength (h1)= $\max(\mu Z(e) \wedge \mu Z(c.e))$

STEP 6 Forming the output set: Output sets for formed rules e.g. output set is Z

STEP 7 Calculation of centroid for each output set: Centroid for fuzzy set Z=0

STEP 8 Defuzzification:

Output=(C.G1+C.G2+C.G3+C.G4+C.G5+C.G6)/(A1+A2+A3+A4+A5+A6)

IV. MODEL OF DVR

MATLAB simulink software is used for simulation and results. Simulink is a software package for modeling, simulating and analyzing dynamic systems.

It supports linear and non-linear systems modeled in continuous time, sampled time or a hybrid of the two Simulink includes a comprehensive block library of sinks, sources, linear and non-linear components and connectors. It has an extensive control library that allows easy implementation of any control algorithm, including linear control, fuzzy logic, neural networks and others. The DVR uses self-commutating IGBT solid-state power electronic switches to mitigate voltage sags in the system. The voltage controlled three single-phase full bridge PWM inverters are used to produce compensating voltage. The switching frequency of the inverters is 3 kHz. Three of single-phase inverters are connected to the common DC voltage source. The DC voltage source is an external source supplying DC voltage to the inverter for AC voltage generation. The three 600/10000 V (rms) single-phase injection transformers boost the output waveform of the inverter unit and supplies voltage to load side , where the voltage is further stepped down to 0.4 kv for sensitive load (load to be protected).The circuit breakers are placed in the circuit with the injection transformers allowing the protection of the DVR.

a) Proposed DVR Configuration

The DVR uses self-commutating IGBT solid-state power electronic switches to mitigate voltage sags in the system. The voltage controlled three single-phase full bridge PWM inverters are used to produce compensating voltage. The switching frequency of the inverters is 3 kHz. Three of single-phase inverters are connected to the common DC voltage source. The DC voltage source is an external source supplying DC voltage to the inverter for AC voltage generation. The three 600/10000 V (rms) single-phase injection transformers boost the output waveform of the inverter unit and supplies voltage to load side , where the voltage is further stepped down to 0.4 kv for sensitive load (load to be protected).The circuit breakers are placed in the circuit with the injection transformers allowing the protection of the DVR.

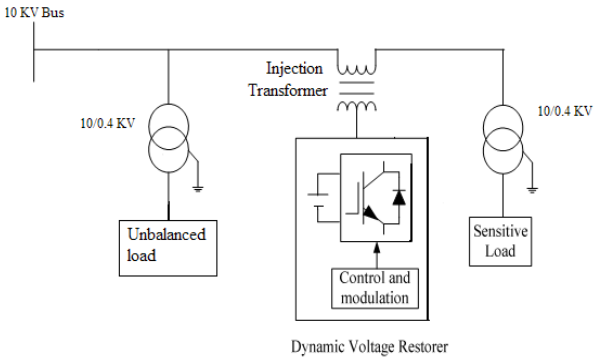

Fig.4 Single line diagram of system

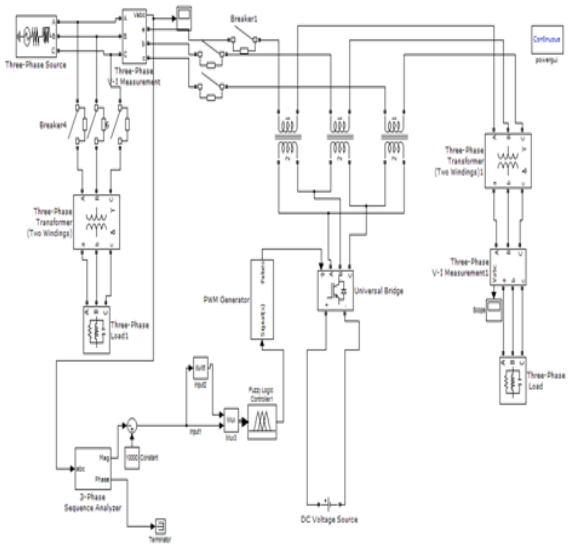

\ Fig. 4.1 Simulink Model of DVR connected to a distribution network (voltage sag produced through load)

Table III : Simulink parameters

Supply voltage	10KV
Load Transformer rating	630 KVA; 10/0.4KV
Single phase transformer voltage rating	0.6/10 KV
Sag duration	50 msec to 170 msec
DC link voltage	600V
Switching frequency	3khz
System Frequency	50 Hz
Typical Cause of Sags	Unbalanced load or Programmable source
Load to be protected	400W

The power circuit of DVR systems can be represented as a three-phase equivalent circuit as shown in Fig.4.2

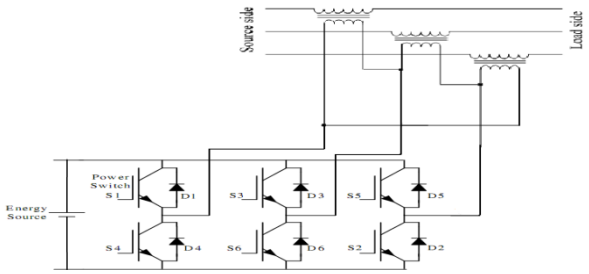

Fig.4.2 Equivalent three phase circuit diagram for DVR

In Fig.4.2 equivalent circuit consists of a dc source (energy storage) being connected to inverter i.e six IGBT diodes which are further connected to injection transformer (three single phase transformers). This transformer connects source side to load side . The DVR should be designed to have minimal affect on the system, during faulted and non-faulted system states.The programmable source block can also be used to produce voltage sag.

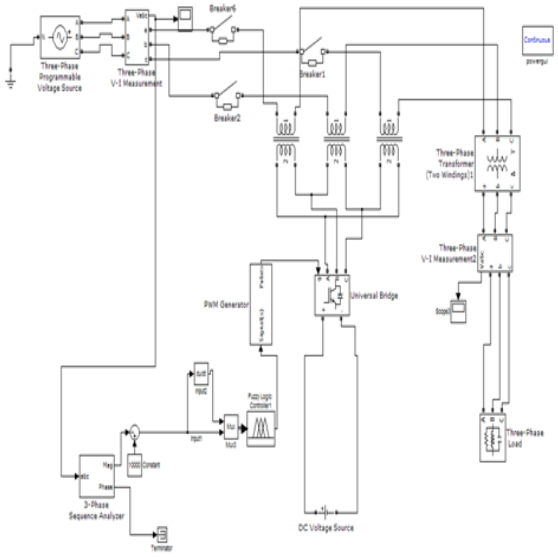

Fig. 4.3 Simulink Model of DVR connected to a distribution network (voltage sag produced through programmable source)

V. SIMULATIONS AND RESULTS

The system runs at 50 Hz frequency and total simulation time is chosen to be 500ms in each case. The scope connected to the V-I measurements at supply side and the load side gives the simulations of supply voltage having sag and the voltage across load.. In Fig's 5, 5.1, and 5.2, it is observed that initially there is no voltage injection and power flow from DVR to the system because no voltage sag is sensed. As soon as the load becomes unbalanced the voltage sag occurs , and the fuzzy controlled PWM inverter produces the missing voltage so that the voltage sag does not affect the sensitive load. The controller inputs are determined by comparing reference signals and measured source data signals. The fuzzy controller output signals are the inputs to the PWM module to generate the required missing voltages . The controller outputs are compared with triangle wave signals to generate the proper switching pulses. Control unit provides the reference voltage for the tracking of source voltage. It controls the inverter to generate pure sinusoidal voltage at the same frequency for the system as shown in simulations. The fuzzy controller operates only for the duration the voltage sag is detected,it starts from 50ms and lasts 170 ms as shown in Fig.5 . Once the voltage sag is detected, the DVR (having DC link voltage of 600V) injects voltage through injection transformer to the load and thus restore the critical load voltage and the load voltage is nearly perfect sinusoidal.

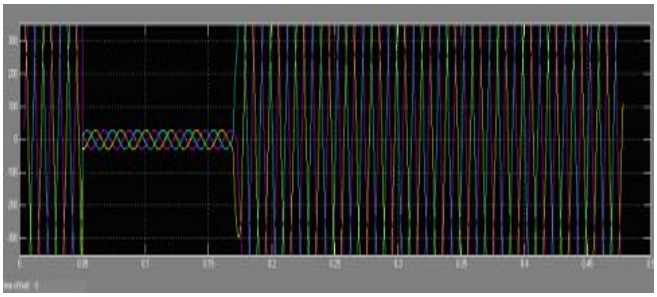

Fig. 5 Simulation of supply voltage having voltage sag

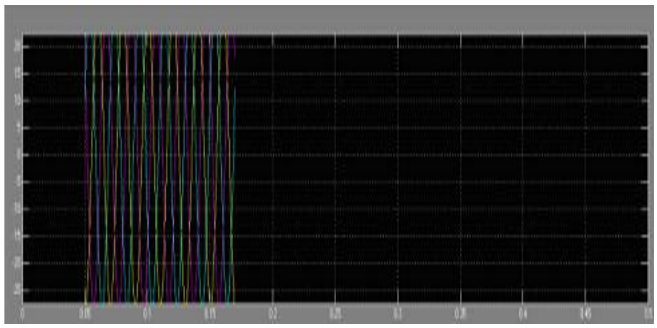

Fig. 5.1 Simulation of DVR injected voltage

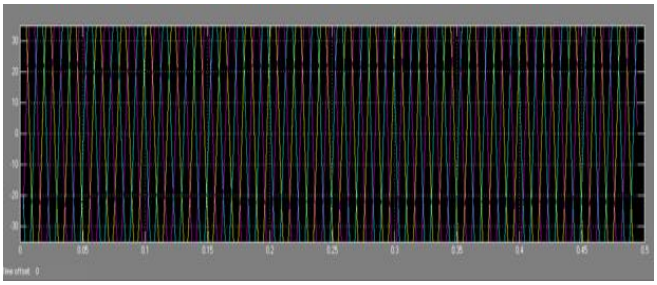

Fig. 5.2 Simulation of voltage across sensitive load after voltage injection

The primary task of DVR is providing the high quality voltage to the critical loads. The fuzzy controllers quickly start working in case the measured phase voltages of source are different from the reference values. The fuzzy controllers applied to DVR enable the proposed system for providing a good power and voltage quality to the critical load. The controller output signals stabilize when all the phase voltages of the load attain the desired value. DVR gives high performance in injecting the more in-phase voltage with proper polarity and phase angle.

The Fig. 5.1 illustrates how quickly the DVR responds for sudden changes to keep the sensitive load voltages at reference value. The calculated injection voltages exactly compensate the sag because the controller exactly calculates the missing voltage. The single-phase PWM inverters managed by the control system generate the three distinct series inverter output voltages to compensate the source voltages at different sag level. The simulation in Fig. 5.2 shows the load side voltage having no sag because of efficient working of DVR. This ability confirms the results of proposed DVR control technique for the mitigation of voltage sags.

V. CONCLUSION

The proposed DVR for 10 kV distribution line has been assumed to be located in medium voltage distribution network level and it can mitigate three-phase sags The DVR has been designed with special importance at the control of PWM inverter i.e fuzzy logic control.

The fuzzy logic controlled DVR has been developed in this thesis to response quickly and obtain a good dynamic performance. Three phase sequence analyser has satisfactorily tracked the source voltage .The summer compared it with reference signal for fuzzy logic controller and then further for PWM modulation without experiencing a disturbance. The proposed DVR has shown the ability to mitigate the voltage sags . The switching devices have correctly been triggered to make the DVR on-line or off-line and protect the DVR from the voltage drop. The voltage sags have been generated by unbalanced load in the grid. It is concluded that the proposed DVR has successfully mitigated the long duration voltage sags and perfectly restored the critical load voltage to nearly 1 pu. The designed DVR has provided a regulated and sinusoidal voltage across the sensitive load and thus efficiency of the system. Thus, the voltage can be restored in a distribution system by controlling the Dynamic Voltage Restorer using Fuzzy logic for better performance.

VI. REFERENCES

1] J.G.Nielsen, M.Newman, H.Nielsen, and F.Blaabjerg "Control and Testing of a Dynamic Voltage Restorer (DVR) at Medium Voltage Level", IEEE transactions on power electronics, vol. 19, no. 3,pp. 1248 – 1253, May.2004

[2] A.Kusko, M.T.Thompson, "Power quality in electrical system" ,third edition, McGraw-Hill,2007

[3] D.M.Vilathgamuwa, H.M.Wijekoon and S.S.Choi, "Investigation of Resonance Phenomena in a DVR Protecting a Load with PF Correction Capacitor", IEEE Power Electronics and Drives Systems Conference, vol.1, pp.811 – 815, Nov. 2003

[4] D.Mahinda, H.M and S.Choi ,"A Novel Technique to Compensate Voltage Sags in Multiline Distribution System—The Interline Dynamic Voltage Restorer ",IEEE transactions on industrial electronics, vol. 53, no. 5, Oct.2006

[5] A.Kara, P.Dahler, D.Amhof and H.Gruning , "Power Supply Quality improvement with a Dynamic Voltage Restorer (DVR)" IEEE, Energy Management and Power Delivery, 1998. Proceedings of EMPD, vol.2, pp.518 – 525, 1998.

[6] H.Hatami, F.Shahnia, A.Pashaei, S.H.Hosseini "Investigation on D-STATCOM and DVR Operation for Voltage Control in Distribution Networks with a New Control Strategy" IEEE Power Tech, pp. 2207 – 2212, 2007

[7] A.Mathnani, A.Mohamed, M.Alauddin M.Ali "Photovoltaic Based Dynamic Voltage Restorer For Voltage Sag Mitigation", IEEE , the 5th Student Conference on Research and Development –SCOReD, pp. 1 – 6, Dec.2007

[8] M.A.Hannan and A.Mohammed , " Modelling and analysis of 24-pulse dynamic voltage restorer in a distribution system", IEEE, Student conference on research and development proceedings,pp. 192-195,.July.2002

[9] G.V.N.Kumar D.D. Chowdary, "DVR with Sliding Mode Control to alleviate Voltage Sags on a Distribution System for Three Phase Short Circuit Fault" , IEEE Region 10 Colloquium and the Third International Conference on Industrial and Information Systems, pp.1-4, Dec.2008.

[10] B.W. Kennedy "Power Quality Primer", second edition,McGraw-Hill,2000

[11] S.N.Sivanandam, S.Sumathi and S.N.Deepa, "Introduction to Fuzzy Logic using MATLAB", Springer-Verlag Berlin Heidelberg 2007

[12] H.R.Karshenas, M.Moradlou, "Design strategy for optimum rating selection in interline DVR",IEEE,ElectricalandComputerEngineering,Canadian Conference, pp.1919-1924,May.2008.

[13] H.Awad, J.Svensson, and M.H.J.Bollen, "Static Series Compensator for Voltage Dips Mitigation",IEEE,PowerTechConferenceProceedings, Bologna, Vol.3, pp:8 June.2003

[14] J.Zhou, H.Zhou , Z.Qi ,"The Study on a Dual-feed-forward Control of DVR to Mitigate the Impact of Voltage Sags Caused by Induction Motor Starting", IEEE, Electrical Machines and Systems, International Conference,pp.1497 -1500,Oct.200

APPENDIX

Table : Power Quality Problems

Disturbance type	**Description**	**Causes**
Impulse 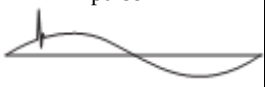	Narrow pulse with fast rise and exponential or damped oscillatory decay; 50 V to 6 kV amplitude, 0.5 µs to 2 ms duration	Load switching, fuse clearing, utility switching, arcing contacts, lightning
EMI 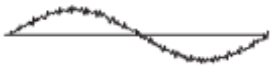	Repetitive low energy disturbances in the 10 kHz to 1 GHz band, with 100 µV to 100 V amplitude	Normal equipment operation (switching power supplies, motor speed controllers etc) carrier power line communication , wireless broadcasting .
SAG 	Decrease in voltage between 0.1pu to 0.9pu	Starting heavy load, utility switching, ground fault
Swell 	Increase in voltage between 1.1pu to 1.8pu	Load reduction, utility switching
Flicker 	Small repetitive fluctuation in voltage level	Pulsating load
Notches 	Repetitive dips in the line voltage, with short durations	Current commutation in controlled or uncontrolled three-phase rectifier circuit
Waveform distortion 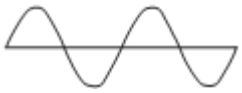	Deviation from ideal sine wave due to the presence of harmonics or inter harmonic	Rectifiers , phase-angle con- - trollers, other nonlinear and/or intermittent loads
Outage 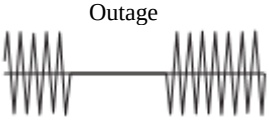	Zero-voltage condition of a single phase or several phases in a multi-phase system, for more than a half-period	Load equipment failure, ground fault, utility equipment failure, accidents, lightning acts of nature

◈◈◈