Rescue System for Borewell Accidents

[1]Sanket Arun Talekar, [2]Suraj Bhimrao Katkar, [3]Pooja Kumari

[1,2,3]Department of Electronics and Telecommunication, Dr. D Y Patil School Of Engineering, Lohegaon, Pune, Maharashtra, India

Email: [1]talekar.sanket@gmail.com, [2]surajkatkar@gmail.com, [3]kpooja212@gmail.com

Abstract —This paper aims at designing a system which not only rescues a trapped victim from bore well but also deals with safe handling of the victim. The system is a light weight machine that goes down into the bore-well and holds the victim systematically. This system is controlled and supported by a cable rope, a gear assembly, a stand and two artificial claws. The structural design of this system makes it possible to have the adaptation to the diameter of bore well and its walls. The condition of trapped child is monitored through wireless camera on PC. Temperature Sensor, gas sensor and LCD are interfaced with microcontroller to sense and display the temperature inside the borewell. The automation structure consists of power supply, switch pad and gear motors. Adding a claw or gripper required additional power supply and DC gear motor. The microcontroller cannot provide the sufficient current to the multiple gear motors, so rather than using motor driver, direct supply is given to gear motors using switch pad which enables the robot to work smoothly. The project is intended to reduce the risk involved during the child rescue operation by analyzing the situation.

I. INTRODUCTION

Now a days the news of children falling in abandoned borewell which are carelessly left uncovered is often seen in different parts of India. These bore wells are the ones which are not of any use to the humans as they do not produce any water and therefore people do not care to fill them up or close them properly. Small children playing near such bore wells often fall into these bore wells and get trapped. Rescue of children trapped inside the bore wells is not only difficult but also a risky task. Rescue teams spend hours and sometimes days in futile attempts to save these little kids. A lot of money is also spent in these missions. In most cases they are unable to save the kids. Such events have happened numerous times in the past, and every time either the government or the establishment is blamed. The rescue process to save the child from bore-well is a long and complicated process [1]. A small delay in the rescue can cost the victim his or her life. The rescue team tries to approach the victim from a parallel well that take about 20-60 hours to dig. This complicated process makes 70% of the rescue operations fail. Very few of the victims have been saved in such accidents. Recently some autonomous robots came on to screen to take out the trapped body in a systematic way. But the question rises, why these bots are not in action in the real world. This brings out safety issue that how safely these robot handle the victim.

The rescue operation mainly consists of three processes: Approaching the Victim, Handling the body, Taking child out of the well. A regular autonomous robot can easily perform the first and third operations in less time. But there is a great chance for injury of victim as they try hooking up body organs and cloths. To overcome these hurdles, we have designed a bore-well recue robot with advanced equipment and devices. Thus the objective of this project is to construct and design a bore well rescue system which not only rescues a trapped baby from bore well but also deals with extreme safe handling of the victim. The design of handling system is made in such a way that the victim gets hurt minimally. This project is a human controlled system which with the help of wireless camera gives an insight view of the victim and steps taken to achieve this. The system consists of a gear assembly to fix the system with the inner walls of the well, two artificial arms to hold the victim by his hands to prevent from further sliding down inside the borewell, a cage like structure made up of thin strips is made to pass through the walls of the borewell to reach below the victim and a safety balloon attached to the lower end of the cage to give the victim support from below. The system is remotely operated using wireless ZigBee technology and using wireless camera we can view both audio and video on the PC.

II. LITERATURE SURVEY

Water well or Bore-well is an excavation or structure created in the ground by digging, driving, boring, or drilling to access groundwater in underground aquifers. The well water is drawn by a pump, or using containers, such as buckets, that are raised mechanically or by hand. Now a days it's quite often we see unused bore wells left open after the use. These well become the death pit for those small kids who unaware of their depth play near these wells. In India, recently we have witnessed some of the most tragic but helpless incidents which touched us deeply and forced us to look after the matter

seriously. As the statistics suggests in the consecutive years starting from 2006, still more than 30 deaths occurred while stuck in bore well [2]. The most mournful fact in that figure is that 92% of that victim is under the age of 10. The children were playing around the bore well unaware of the fact that the bore well was waiting for them in the form of a death trap. After slipping in the rotten congested pitch black environment they were waiting for the help to come. But the lack of oxygen and deathly atmosphere has taken their life slowly before the rescue team can reach them. We have tried to summarize the incidents in this concern:

- The incident of losing lives trapped in bore-well was highlighted in 2006 where a 5 year old child named Prince was rescued by Indian Army experts after a tough combat which lasted 49 hours. The boy showed tremendous survival instinct by remaining calm and being co-operative with survivors. Statistics reveal that not many kids were as lucky as Prince, many of them died; some received public attention, while many went unnoticed.

- Another incident in Indore took place in the same year where a child name Deepak stuck in the pit hole and died for the lack of oxygen.

- On April 7,2007 in Village Adsar in Bikaner district (Rajasthan),we witnessed the death of a two year-old girl named Sarika who had fallen in a 155-feet deep open bore-well and on the same day, a two-year-old girl, Kinjal Man Singh Chauhan, fell in an open bore-well in village Madeli (Gujarat) and died.

- On February 6, 2007, a two-year-old boy, Amit, fell in a 56-feet deep well in a village near Katni (MP) and died. On March 9, 2007, in Karmadia(Gujarat) three year-old died due to same. On June 17,2007 an open bore-well in village Shiroor (Pune, Maharashtra)claimed the life of a five-year-old child.

- Six-year old Suraj lost his life when he fell in a 180-feet-deep bore-well in village Nimada (Jaipur, Rajasthan) on July 4th,2007. On August 4,2007 six-year-old Kartik died when he slipped in a200-feet-deep open bore-well in village BotalaGudur(Andhra Pradesh).

- On March 25, 2008 a three-year-old girl, Vandana, fell in a160-feet-deep open bore-well in village Tehra near Agra.2-year old Sonu fell in 150 feet deep bore well pit in the northern state of Uttar Pradesh. He was brought out dead after four days of rescue operation.

- In 2009, KirtanPranami, an11-year-old boy from Palanpur in Gujarat died after he fell into a 100ft (30m) bore-well. Within months, two-year-old Darawath Mahesh fell into a 35ft (10m)bore-well in Warangal in Andhra Pradesh and died.

- Five-year-old child who fell into a 250-feet deep bore-well in Jaipur in 2009 was also saved.

- Four-year-old Anju Gujjar was rescued also from a 50-foot deep open bore-well in Rajasthan.

- The redemption of 4-year old Mahi (2012) took army experts86 hours ordeal combat which led to the death of the poor kid.

- Other sad incidents in 2012 was the deadly incidents of 4-yearold boy of Tamil Nadu (2011), 1-year old Payal of Indore(2012), 12-year old Bakul of Gujarat (2012), or 17-year old Roshan of Howrah, West Bengal (2012). The sadness caries out even now after 6 years from the first case that gain huge limelight and support from the media.

Each time something happens we find ourselves ill-equipped to deal with the crisis and the precious time elapses. We first observed an extensive approach from the Indian Army military jawans (L&T ,GMR) in the case of Mahi (2012). As the rescuer team found that the task of picking up the kid in a straight path is not possible, they started to dig up another well in form of a well in not so far distance from the accident spot. An army man was been lowered into the new parallel pit where he started to dig a vertical lane to reach Mahi as shown in figure. The operation lasted for around 86 hours and at last what her parents got was the body without internal soul. Such incidences are now observed in almost every part of India [4]. Below figure shows some recent cases.

S.No.	Name of child	Age	Place of incident	Alive or not	Source of information
1	R Madhumitha	3	Villupuram Distt., Tamilnadu	Recovered alive but died in hospital	The Times of India(5-4-2014)
2	Radheshyam	2.5	Churu Distt., Jaipur	Died in hospital	The Times of India(7-1-2014)
3	Chotu	9	Karauli Distt., Rajsthan	Not alive	IBN Live(10-8-2013)
4	Tanu	4	Palwal, Haryana	Alive	IBN Live(30-5-2013)
5	Muthulakshmi	7	Suryapalli Village, Tamilnadu	Died in hospital	IBN Live(28-4-2013)
6	K Ajith	5	Karimnagar, Andhrapradesh	Not alive	IBn Live(8-12-2012)
7	Mahi	5	Gurgaon	Not alive	Zee News(27-6-2012)
8	Tirumalesh	1	Mahabubnagar, Andhrapradesh	Not alive	Zee News(8-12-2011)
9	Ankit	4	Raimalpura Village, Kochi	Not alive	Zee News (4-11-2011)
10	Asmita	1	Rajkot, Gujrat	Not alive	Zee News(26-6-2011)
11	Om Santosh Devre	1.5	Nashik	Not alive	Zee News(20-3-2011)
12	Dilnaaj Kaur	3	Dheera Village,Gurdaspur, Pb.	Not alive	The Hindu (4-6-2010)
13	Ankitma Wada	2.5	Bhopal, MP	Not alive	ND TV (29-01-2010)
14	Pankal	4	Bhilwara, Rajsthan	Not alive	India Today(29-01-2010)
15	D.Dinesh	2	Hyderabad	Not alive	Hindustan Times(19-01-2010)
16	Darawath Prasad	1.5	Warangal AP	Not alive	NDTV Correspondent(18-01-2010)

Fig. 1. Incidents of children trapped in borewell [3].

Following is the year wise distribution of such borewell accidents all over India.

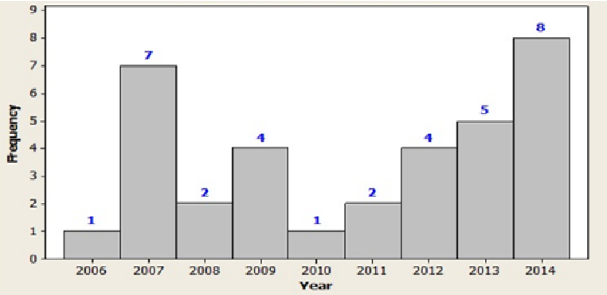

Fig. 2. Borewell incidents between 2006-2014 [4].

III. PROBLEM DEFINITION

In today's era of growing technology it is possible to achieve all those targets which we humans cannot complete on our own. Thus the main objective of this proposed model is to design a system which performs the task of rescue of the victims trapped inside the borewell along with considering the preventive measures for the safety of the victim. The basic concept of this project is to bring the victim to ground without any injuries in a very short span. The system is provided with gripping capability based on pick and place concept and adaptability to the inner environment of the well. This is also provided with self- sustaining capability and sensing ability to sense the environmental factors (temperature, oxygen) around it. The whole process is made wireless to remove complexity in wired systems. ZigBee technology is being implemented to capture all the information needed [5]. A video camera to observe the actual situation closely and continuous interaction with the victim could also be possible Video transmissions are done by using the wireless camera which also gives an effective visual display of the actions performed by the system. The whole operation is made effective by using the tele-operation phenomenon between the system and the user. Thus a system is designed that can take out the trapped body in systematic way. It will also perform various life-saving operations for the victims such as oxygen supply.

IV. THE NEW APPROACH

The system proposed in this paper is designed with the approach of rescuing a victim trapped in borewell in minimum time with great safety and accuracy. Below is the systematic hand drawn diagram of the proposed system with dimensions of each part specified in millimeter scale.

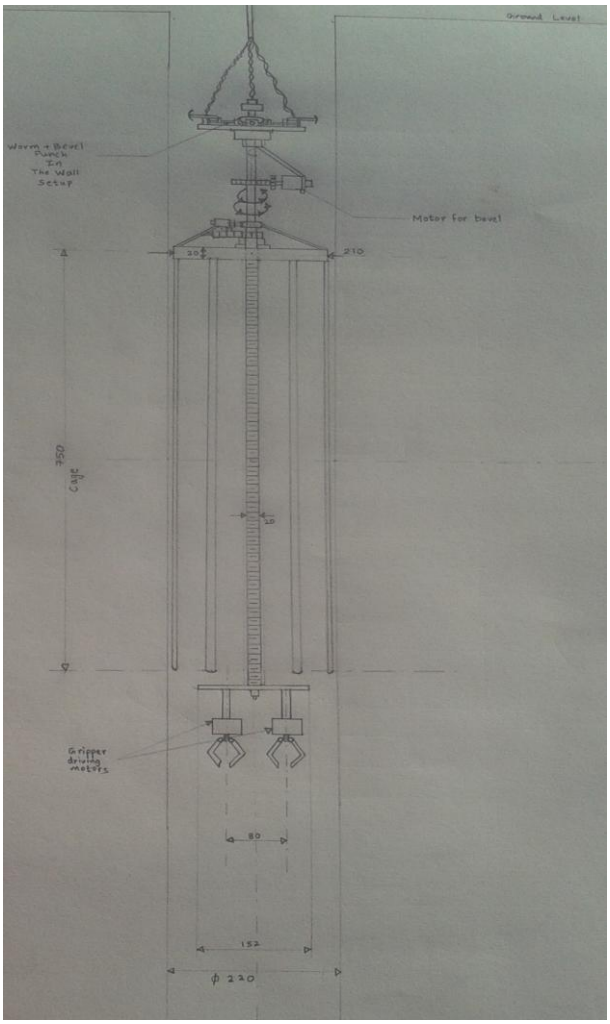

Fig. 3. Hand drawn discription of the proposed system

Based on the above design, the whole system is devided into two modules: Module 1 and Module 2. Module 1 consists of the setup which is to be sent inside the borewell. It includes the gear assembly for fixing the system inside the well, the microcontroller, servo motors for controlling the gripper, temperature sensor to measure the temperature inside the borewell, gas sensor to quantify the amount of oxygen inside the well for the victim, the wireless video camera and its transmitter to continuously monitor the condition of the victim and the ZigBee module to transmit the information gathered by the microcontroller from different sensors.

The block diagram of the first module is as shown below.

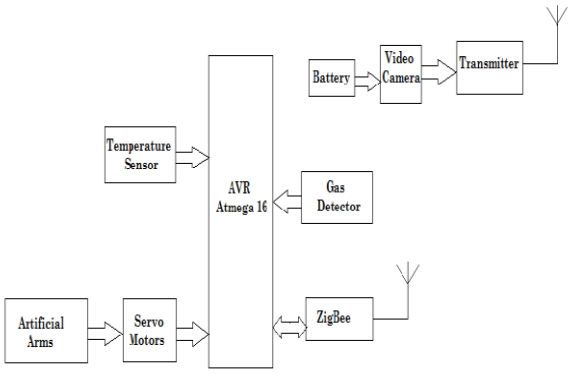

Fig. 4. Module 1 Block Diagram

The second module is the one present on operator's side. It consists of the ZigBee reciever to receive the data from the microcontroller, the display unit (mainly a LCD) to display this acquired data, the camera reciver and the source to display the video (mainly the TV or PC) and the remote controller to control and operate the setup inside the borewell based on the data received and the video being displayed showing the current position of the victim. The block diagram for the second module which is to be present with operator is as shown below.

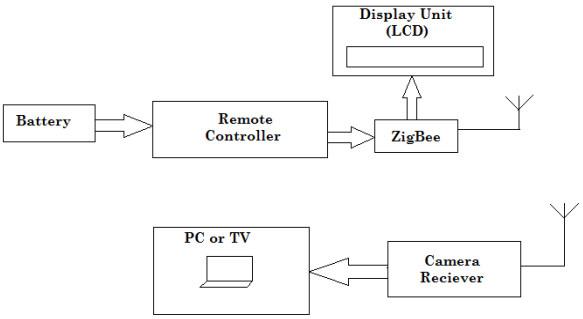

Fig. 5. Block Diagram for Module 2

V. REQUIREMENTS

The proposed system is not only concerned with tackling the rough environment inside the borewell but also deals with the safe handling of the of a human life trapped inside the well. Therefore, taking this into concern the components required to design this proposed model are chosen such that they are not only highly strong but also delicate enough to maintain the soft handling of the victim so that he gets injured least. Special attention has been paid to the parts which will be in contact with the body of the victim. For example the inner lining of the gripper is cover with a layer of high quality sponge which prevents high pressure on the arms of the victim. Following is the list of the major components required to design this system.

TABLE I. COMPONENT REQUIREMENTS

Sr. No	Component	Function
1	Digital integrated camera	To detect and handle the positioning of the victim
2	Oxygen supply system	To supply oxygen to the victim
3	DC Motors with separate power supply	Direct supply using switch pad to go down the bore well smoothly.
4	Advanced small sized servo motors	To run the gears for robot control
5	Fork screw system	To make the robot immovable during rescue.
6	Gears	To control the movements of robot action by different gears
7	High Strength rope and pulley	To carry and support the robot and equipment.
8	Safety balloon	To reduce the likelihood of fatal injury
9	Microcontroller-Fully computerized control	To integrate all electrical device controls in the computer
10	A communication technology	To connect local wireless nodes and provides high stability
11	Temperature Sensor	To measure temperature inside the bore-well
12	Carpenter's levelling equipment	To ensure exact centre of the robot through rope at the surface

VI. MECHANISM OF WORKING

The working mechanism of this projected system is a combination of pick and place mechanism, data acquit ion system and the safety mechanisms for dealing with a human life. The overall working of the system deals with two cases based on the position of the victim i.e. whether the victim is trapped in the midway inside the well or at the bottom end of the well. Below is the stepwise description of the detailed working of the system:

Step 1: Setup the system outside the borewell with the help of a metal stand.

Step 2: Connect the rope to the pulleys and slowly lower the system inside the borewell.

Step 3: As the machine is sent into the bore-well hole, electric wires for the motor from the control unit chip is attached along the rope.

Step 4: As the system approaches the victim his position can be monitored on the PC with the help of wireless camera attached to the lower plate of the setup.

Step 5: Based on the position of the victim rotate the setup such that the two artificial claws are right above the arms of the victim.

Next step is based on the two cases stated below:

CASE I. When the victim is struck mid way in the borewell

Step 6: Adjust the orientation of the claws with respect to the victim's position and hold the victim by his arms to prevent further sliding.

OR

CASE II. When the victim is struck at the bottom end of the borewell

Step 6: Adjust the orientation of the claws with respect to the victim's position and hold the victim by his arms to and pull him up slightly such that some space is created at the bottom.

(To prevent excessive pressure on victim's arms the internal layer of the claws is lined with some soft material).

Step 7: Now lower the cage assembly such that it reaches at least 10 centimetres below the victim.

Step 8: with the help of compressor blow the air slowly inside the safety balloon attached to a strip of the cage.

Step 9: when the balloon is completely blown pull the cage assembly slightly upwards such that the victim get the support of the balloon from the base.

Step 10: After ensuring the safety of the victim pull the whole setup slowly outwards.

VII. ADVANTAGES

The system so designed has got many advantages over the conventional systems of rescue operations such as:

- Least time consumption.
- Low cost as compared to the army rescue methods.
- Light weight but sufficiently strong to carry a victim of up to 15 kilograms.
- Completely automatic but accordingly controlled by human.
- Less human resource requirement.
- Safer enough to rescue a victim with minimum injuries.
- Presence of sensors make it smart system which analyses the internal environment of the borewell.

VIII. FUTURE SCOPE

This proposed model can be further improvised by use some more advanced technological equipments such as:

- Use of PIR sensor and ultrasonic sensor can make the task of allocating the victim more easier.
- Introducing pressure sensors on the artificial claws can help us in determining the amount of pressure applied on the victim's arms.
- The diameter of the cage can be made variable so that it can adjust itself in any size of borewell.

REFERENCES

[1]. B. Bharathi, B. Suchitha Samuel, "Design and Construction of Rescue Robot and Pipeline Inspection Using Zigbee" International Journal of Scientific Engineering and Research, Volume 1 Issue 1, September 2013.

[2]. G. Nithin, G. Gowtham and S. Narayanan, "Design and simulation of bore-well rescuer robot-Advanced", ARPN Journal of Engineering and Applied Sciences, volume: 9, no. 5, May 2014.

[3]. Palwinder Kaur, Ravinder Kaur, Gurpreet Singh, "Pipeline Inspection And Borewell Rescue Robot" IJRET: International Journal of Research in Engineering and Technology, Volume: 3 Issue: 04 Apr-2014.

[4]. OndiappanArivazhagan,"G-Chart for Predicting Bore-well Accidents" , Deccan Chronicle Newspaper –Bangalore.

[5]. K.Saran, S.Vignesh, Marlon Jones Louis, "Bore-well Rescue Robot" International Journal of Research in Aeronautical and Mechanical Engineering, volume: 2 issue.4,April 2014.